Part List

USER MANUAL

Taleco Gear

TODDLER TOWER

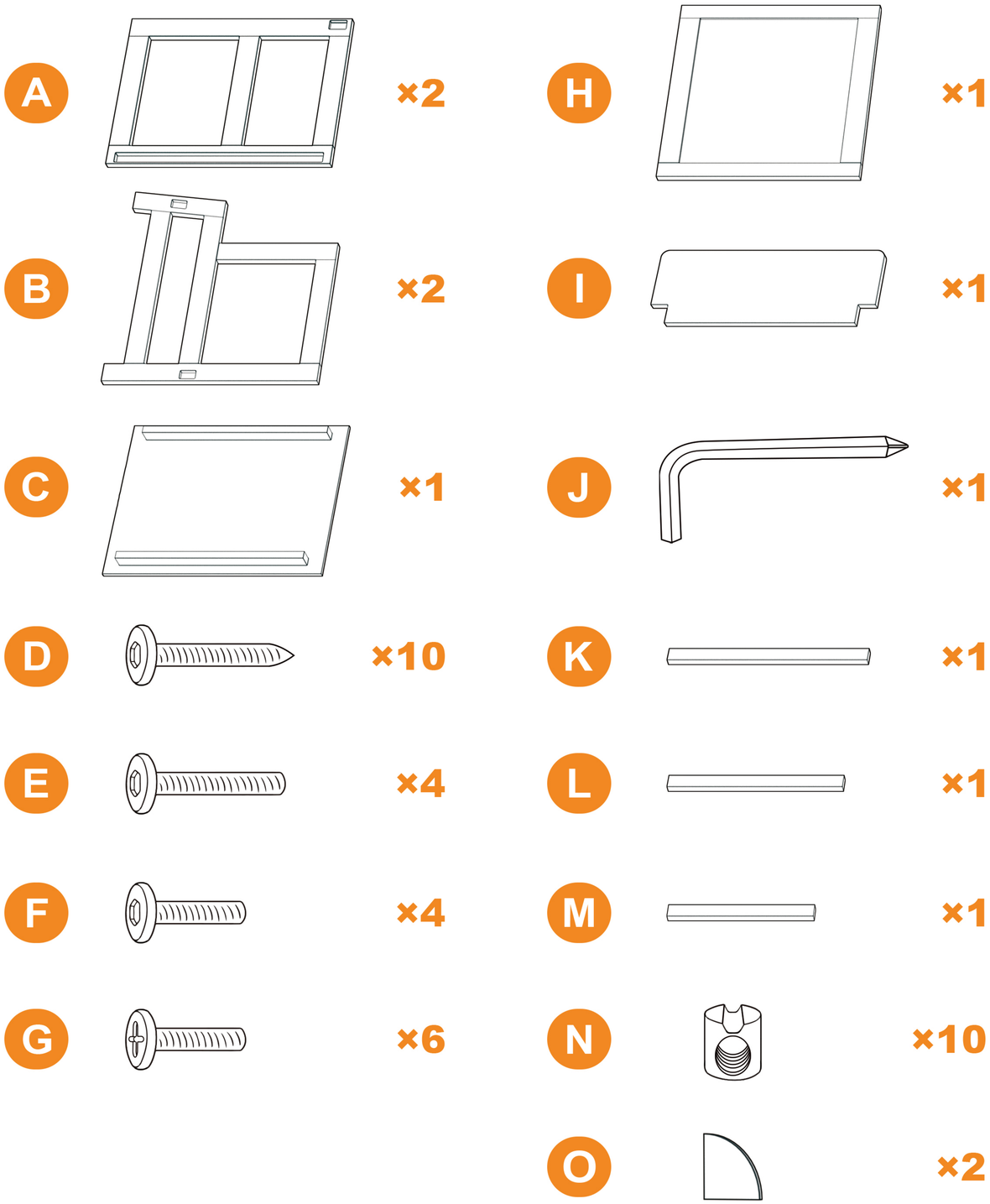

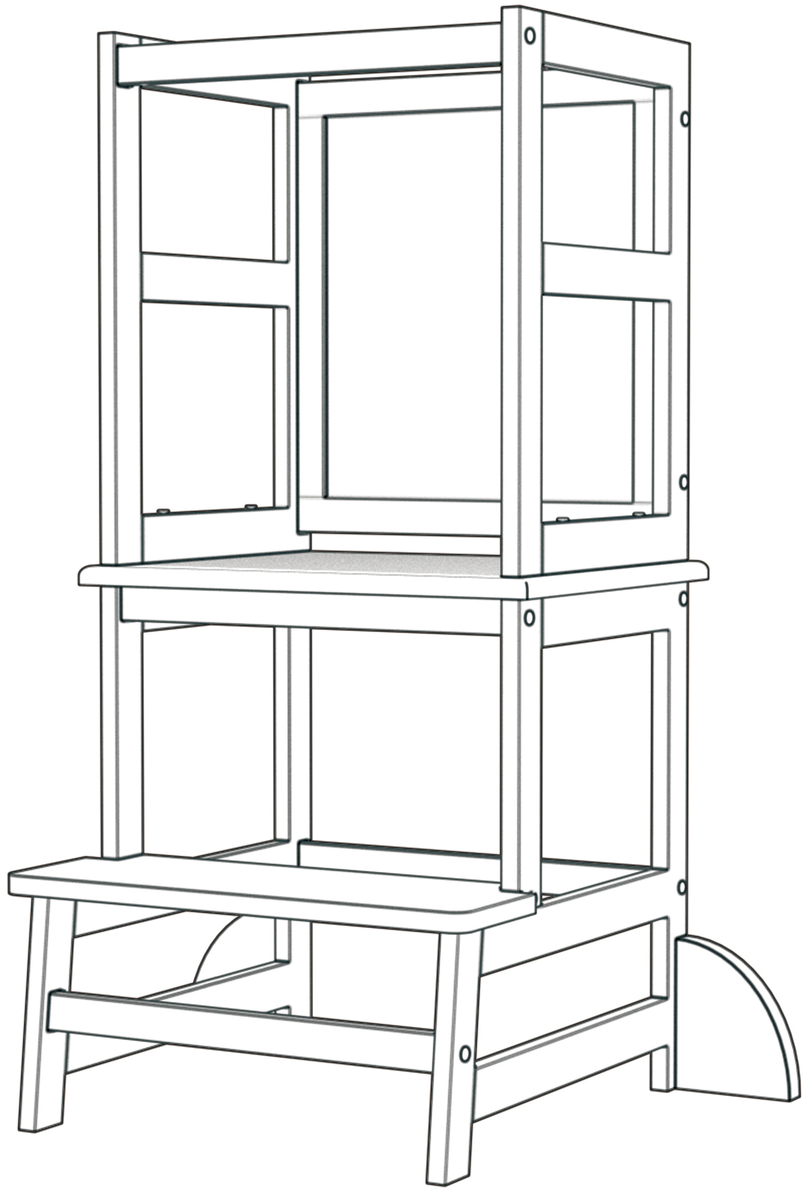

YouTube TALECO GEAR

talecogear@163.com

Assembly Instructions

1

F × 2

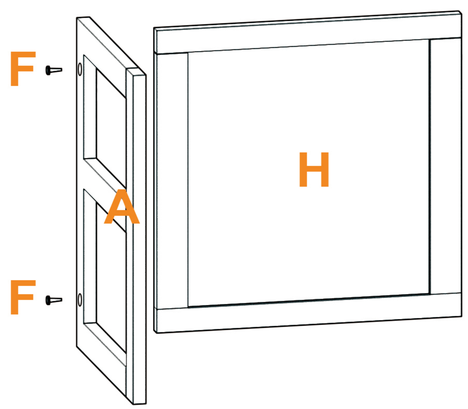

2

D × 1

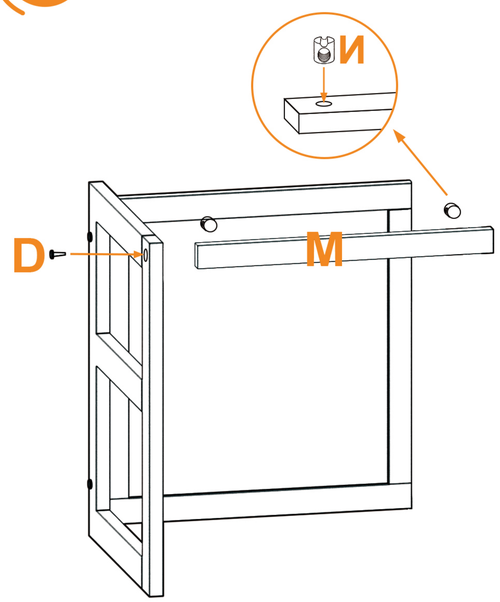

3

F × 2

D × 1

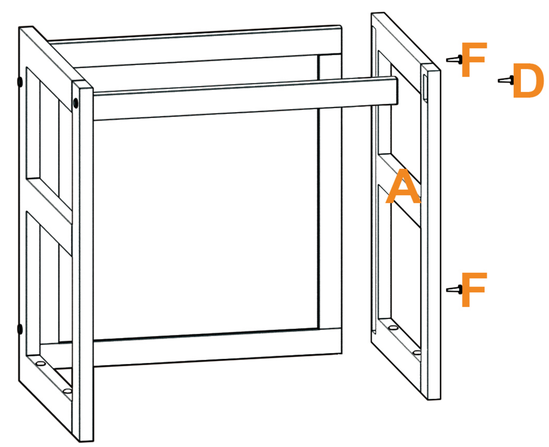

Note the installation positions of D and F

4

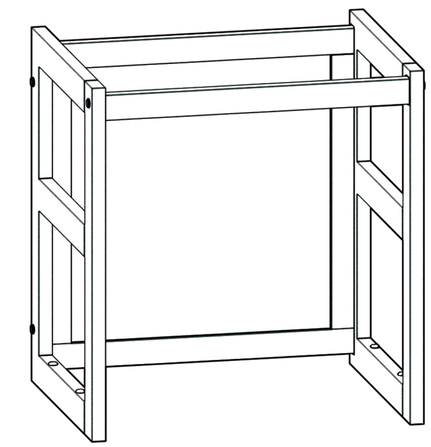

5

D × 8

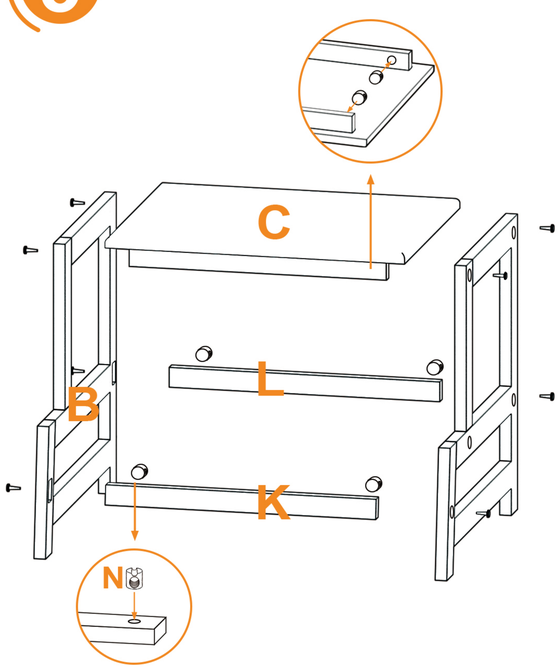

6

G × 2

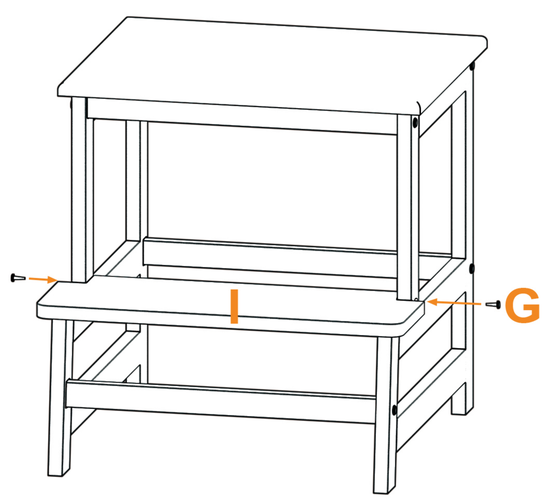

7

E × 4

G × 4

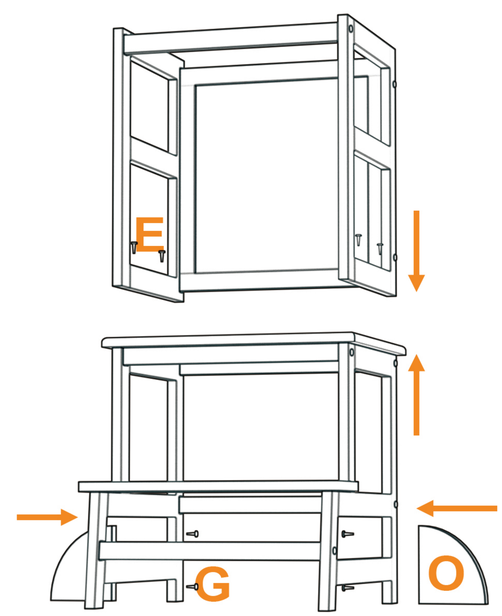
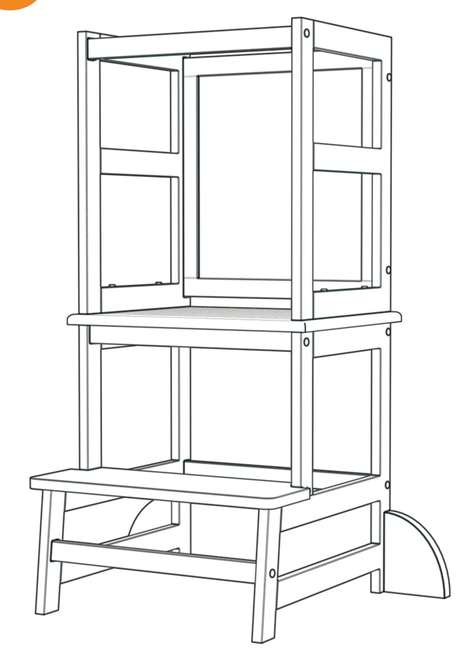
complete